Jordan-Elbridge Central School District
Summary of all Accounts
Treasurer's Monthly Report
For the Period - Febraury 1, 2021 - February 28, 2021

Fund	Balance 1/31/2021	Balance 1/31/2021
General Fund-Lyons	888,404.81	838,592.47
General Fund-NOW-CCTC	217,062.68	282,946.23
General Fund-Tax Acct-CCTC	-	-
General Fund-ICS-CCTC	4,743,088.45	4,293,814.98
General Fund-Reserve-CCTC	4,123,096.52	4,123,729.00
School Food Service Fund-Lyons	7,277.84	9,340.03
Debt Service Fund-CCTC	1,070,638.58	1,070,802.76
Capital Fund-CCTC	1,564.62	1,565.78
Capital Fund-ICS-CCTC	114,009.22	14,287.68
Special Aid Fund-CCTC	21,799.04	9,031.87
Payroll Account-CCTC	15,302.40	8,634.57
Trust & Agency-CCTC	43,309.19	17,561.56
Private Purpose Trust-Checking-Lyons	23,264.27	23,264.72
Extraclassroom Activity Acct-High School-Lyons	45,376.69	43,512.54
Extraclassroom Activity Acct-Middle School-Lyons	13,253.31	13,253.56
	$ 11,327,447.62	$ 10,750,337.75

This is to certify that the cash balances above are in agreement with the bank statements, as reconciled.

R Hartwell
Treasurer

3/10/21
Date

Received by the Board of Education and entered as part of the minutes of the board meeting held.

Clerk of Board of Education

Date

Jordan-Elbridge Central School District
General Fund
Treasurer's Monthly Report
For the Period - Febraury 1, 2021 - February 28, 2021

Internal books - A 205	
Total available balance, prior month	888,404.81
Receipts during month:	
Taxes collected	0.00
Receipts (cash)	171.00
Interest earned	16.66
Subtotal -	187.66
Total Receipts, plus beginning balance	888,592.47
Disbursements during month:	
Transfer to Other Funds	(50,000.00)
NSF checks and fees	0.00
Total Disbursements	(50,000.00)
Cash Balance, per books	**838,592.47**

Lyons xxxx4460	
Reconciliation with bank statement:	
Balance per bank statement	838,592.47
Less outstanding checks	0.00
Plus deposits in transit	0.00
Other items	0.00
Available balance	838,592.47
Reconciled bank Balance	**838,592.47**

Jordan-Elbridge Central School District
General Fund-NOW
Treasurer's Monthly Report
For the Period - Febraury 1, 2021 - February 28, 2021

Internal books - A 203

Total available balance, prior month	217,062.68
Receipts during month:	
Transfers from district accounts	850,000.00
Cash receipts	1,251,356.20
Retiree health insurance	8,904.75
Medicaid	10,141.98
VLT Aid	98,731.02
State Aid Smart Schools	190,200.46
State Aid	183,346.66
State Aid RMR IV Combined	5,019.20
Interest earned	47.60
Subtotal -	2,597,747.87
Total Receipts, plus beginning balance	2,814,810.55
Disbursements during month:	
Warrants #A-38, 39, 41	(901,864.32)
Transfer to district accounts	(1,625,000.00)
Postage	(5,000.00)
Total Disbursements	(2,531,864.32)
Cash Balance, per books	**282,946.23**

CCTC xxxx5859

Reconciliation with bank statement:	
Balance per bank statement	320,683.78
Less outstanding checks	(38,744.78)
Plus deposits in transit	1,007.23
Other items	
Available balance	282,946.23
Reconciled bank Balance	**282,946.23**

Jordan-Elbridge Central School District
General Fund-Tax Account
Treasurer's Monthly Report
For the Period - Febraury 1, 2021 - February 28, 2021

Internal books - A 204	
Total available balance, prior month	71,712.90
Receipts during month:	
Taxes collected	281,307.88
Total Receipts, plus beginning balance	353,020.78
Disbursements during month:	
Transfer to other District accounts	(353,020.78)
Total Disbursements	(353,020.78)
Cash Balance, per books	**0.00**

CCTC xxxx5824	
Reconciliation with bank statement:	
Balance per bank statement	0.00
Less outstanding checks	0.00
Plus deposits in transit	
Other items	0.00
Available balance	0.00
Reconciled bank Balance	**0.00**

Jordan-Elbridge Central School District
General Fund - ICS
Treasurer's Monthly Report
For the Period - Febraury 1, 2021 - February 28, 2021

Internal books - A 230.1	
Total available balance, prior month	4,743,088.45
Receipts during month:	
Tranfser from other accounts	400,000.00
Interest earned	726.53
Subtotal -	400,726.53
Total Receipts, plus beginning balance	5,143,814.98
Disbursements during month:	
Transfer to other District accounts	(850,000.00)
Total Disbursements	
Cash Balance, per books	**4,293,814.98**

CCTC Bank xxxx603	
Reconciliation with bank statement:	
Balance per bank statement	4,293,814.98
Less outstanding checks	0.00
Plus deposits in transit	0.00
Other items	0.00
Available balance	4,293,814.98
Reconciled bank Balance	**4,293,814.98**

Jordan-Elbridge Central School District
General Fund Reserve - ICS
Treasurer's Monthly Report
For the Period - Febraury 1, 2021 - February 28, 2021

Internal books - A 230	
Total available balance, prior month	4,123,096.52
Receipts during month:	
Tranfser from General Tax - CCTC	0.00
Interest earned	632.48
Subtotal -	632.48
Total Receipts, plus beginning balance	4,123,729.00
Disbursements during month:	
Transfer to district accounts	0.00
Total Disbursements	0.00
Cash Balance, per books	**4,123,729.00**

CCTC Bank xxxx5514	
Reconciliation with bank statement:	
Balance per bank statement	4,123,729.00
Less outstanding checks	0.00
Plus deposits in transit	0.00
Other items	0.00
Available balance	4,123,729.00
Reconciled bank Balance	**4,123,729.00**

Jordan-Elbridge Central School District
School Food Service Fund
Treasurer's Monthly Report
For the Period - Febraury 1, 2021 - February 28, 2021

Internal books - C 201

Total available balance, prior month	$	7,277.84
Receipts during month:		
School Food Service Deposits		25.00
Online School Food Service Payments		30.00
Transfers from other accounts		50,000.00
Adult payments on account		-
Interest earnings		0.39
Subtotal		50,055.39
Total Receipts, plus beginning balance		57,333.23
Disbursements during month:		
Warrants #C-8		(47,993.20)
Transfers to other accounts		-
Total Disbursements		(47,993.20)
Cash Balance, per books		**9,340.03**

Lyons Bank - account xxxx4478

Reconciliation with bank statement:	
Balance per bank statement	9,435.28
Less outstanding checks	(95.25)
Plus deposits in transit	
Other Credits	0.00
Other items	0.00
Available balance	9,340.03
Reconciled bank Balance	**9,340.03**

Jordan-Elbridge Central School District
Debt Service Fund
Treasurer's Monthly Report
For the Period - Febraury 1, 2021 - February 28, 2021

Internal books - V 202

Total available balance, prior month		1,070,638.58
Receipts during month:		
Transfer from other funds	0.00	
Interest earned	164.18	
Subtotal -	164.18	
Total Receipts, plus beginning balance		1,070,802.76
Disbursements during month:		
Interfund transfer to General Fund per budget	0.00	
Total Disbursements	0.00	
Cash Balance, per books		**1,070,802.76**

CCTC - ICS account xxx5492

Reconciliation with bank statement:	
Balance per bank statement	1,070,802.76
Less outstanding checks	0.00
Plus deposits in transit	0.00
Other items	0.00
Available balance	1,070,802.76
Reconciled bank Balance	**1,070,802.76**

Jordan-Elbridge Central School District
Capital Fund
Treasurer's Monthly Report
For the Period - Febraury 1, 2021 - February 28, 2021

Internal books - H 202

Total available balance, prior month	1,564.62
Receipts during month:	
Transfer from other accounts	99,729.94
Interest	1.16
Subtotal -	99,731.10
Total Receipts, plus beginning balance	101,295.72
Disbursements during month:	
Warrants #H-13, 14	(99,729.94)
Transfer to other accounts	
Total Disbursements	(99,729.94)
Cash Balance, per books	**1,565.78**

CCTC - Capital fund account xxxx5913

Reconciliation with bank statement:	
Balance per bank statement	55,102.89
Less outstanding checks	(52,529.88)
Plus deposits in transit	0.00
Other items	1,007.23
Available balance	1,564.62
Reconciled bank Balance	**1,565.78**

Jordan-Elbridge Central School District
Capital Fund - ICS
Treasurer's Monthly Report
For the Period - Febraury 1, 2021 - February 28, 2021

Internal books - H 203	
Total available balance, prior month	114,009.22
Receipts during month:	
Tranfser from other accounts	
Interest earned	8.40
Subtotal -	8.40
Total Receipts, plus beginning balance	114,017.62
Disbursements during month:	
Transfer to Capital Fund Checking	(99,729.94)
Total Disbursements	(99,729.94)
Cash Balance, per books	**14,287.68**

CCTC Bank xxxx859	
Reconciliation with bank statement:	
Balance per bank statement	14,287.68
Less outstanding checks	0.00
Plus deposits in transit	0.00
Other items	0.00
Available balance	14,287.68
Reconciled bank Balance	**14,287.68**

Jordan-Elbridge Central School District
Special Aid Fund
Treasurer's Monthly Report
For the Period - Febraury 1, 2021 - February 28, 2021

Internal books - F 201

Total available balance, prior month	21,799.04
Receipts during month:	
Transfers	0.00
Interest income	0.00
Subtotal -	0.00
Total Receipts, plus beginning balance	21,799.04
Disbursements during month:	
Warrants #F-14 & 15	(12,737.17)
Void check fee	(30.00)
Total Disbursements	(12,767.17)
Cash Balance, per books	**9,031.87**

CCTC - Special Aid fund account xxxx5875

Reconciliation with bank statement:	
Balance per bank statement	21,342.34
Less outstanding checks	(12,310.47)
Plus deposits in transit	0.00
Other items	0.00
Available balance	9,031.87
Reconciled bank Balance	**9,031.87**

Jordan-Elbridge Central School District
Payroll Account
Treasurer's Monthly Report
For the Period - Febraury 1, 2021 - February 28, 2021

Internal books - T 202	
Total available balance, prior month	15,302.40
Receipts during month:	0.00
Transfer from other accounts	835,000.00
Void check	0.00
Direct Deposit returned	0.00
Deposits	0.00
Interest income	4.49
Subtotal -	835,004.49
Total Receipts, plus beginning balance	850,306.89
Disbursements during month:	
02/12/21 payroll (net)	(423,740.60)
02/26/21 payroll (net)	(417,931.72)
Transfer to other accounts	0.00
Total Disbursements	(841,672.32)
Cash Balance, per books	**8,634.57**

CCTC - Payroll Account xxxx5891	
Reconciliation with bank statement:	
Balance per bank statement	33,916.34
Less outstanding checks	(25,281.77)
Plus deposits in transit	0.00
Other items	
Available balance	8,634.57
Reconciled bank Balance	**8,634.57**

Jordan-Elbridge Central School District
Trust & Agency Account
Treasurer's Monthly Report
For the Period - Febraury 1, 2021 - February 28, 2021

Internal books - T 201	
Total available balance, prior month	43,309.19
Receipts during month:	
Transfer from other accounts	390,000.00
Receipts	0.00
Interest income	3.28
Subtotal -	390,003.28
Total Receipts, plus beginning balance	433,312.47
Disbursements during month:	
ProFlex Disbursements	(9,219.89)
Warrant #T-15 and T-16	(1,248,203.34)
Less net payroll	841,672.32
Transfers	0.00
Total Disbursements	(415,750.91)
Cash Balance, per books	**17,561.56**

CCTC - Trust & Agency Account xxxx5476	
Reconciliation with bank statement:	
Balance per bank statement	49,491.99
Less outstanding checks	(31,928.85)
Plus deposits in transit	
Other items	(1.58)
Available balance	17,561.56
Reconciled bank Balance	**17,561.56**

Jordan-Elbridge Central School District
Private Purpose Trust Account
Treasurer's Monthly Report
For the Period - Febraury 1, 2021 - February 28, 2021

Internal books - TE 200

Total available balance, prior month	$ 23,264.27
Receipts during month:	
Interest earnings	0.45
Subtotal	
Total Receipts, plus beginning balance	$23,264.72
Disbursements during month:	
Total Disbursements	0.00
Cash Balance, per books	**$23,264.72**

Lyons Bank - Scholarship account xxxx4616

Reconciliation with bank statement:

Balance per bank statement	$23,264.72
Less outstanding checks	0.00
Plus deposits in transit	0.00
Other items	0.00
Available balance	$23,264.72
Reconciled bank Balance	**$23,264.72**

Jordan-Elbridge Central School District
Extra-Classroom Activity Account - High School
Treasurer's Monthly Report
For the Period - Febraury 1, 2021 - February 28, 2021

Internal books	
	$ 45,376.69
Receipts during month:	651.05
Interest earnings	0.90
Subtotal	651.95
Total Receipts, plus beginning balance	46,028.64
Disbursements during month:	(2,516.10)
NSF & Fees	
Total Disbursements	(2,516.10)
Cash Balance, per books	**43,512.54**

Lyons Bank - H.S. ECA account xxxx9325	
Reconciliation with bank statement:	
Balance per bank statement	46,794.05
Less outstanding checks	(3,281.51)
Plus deposits in transit	0.00
Other items	
Available balance	43,512.54
Reconciled bank Balance	**43,512.54**

Jordan-Elbridge Central School District
Extra-Classroom Activity Account - Middle School
Treasurer's Monthly Report
For the Period - Febraury 1, 2021 - February 28, 2021

Internal books -

Total available balance, prior month	13,253.31
Receipts during month:	0.00
Interest earnings	0.25
Subtotal	0.25
Total Receipts, plus beginning balance	13,253.56
Disbursements during month:	0.00
Total Disbursements	0.00
Cash Balance, per books	**13,253.56**

Lyons Bank - M.S. ECA account xxxx0693

Reconciliation with bank statement:

Balance per bank statement	13,253.56
Less outstanding checks	0.00
Plus deposits in transit	0.00
Other items	
Available balance	13,253.56
Reconciled bank Balance	**13,253.56**

Collateral requirements

February 28, 2021

	Bank Balance February 28, 2021	FDIC Coverage	Balance to be covered by Collateral	Market Value Of Collateral February 28, 2021	
Chemung Canal Trust:					
General Fund - Checking	320,683.78				
Tax Collection	-				
Payroll - Checking	33,916.34				
Trust & Agency - Checking	49,491.99				
Special Aid Fund - Checking	21,342.34				
Capital Fund - Checking	55,102.89				
	$ 480,537.34	250,000.00	**230,537.34**	**3,149,410.31**	*updated 3/10/21 for 2/28/21*
Chemung Canal Trust - ICS accounts:					
General Fund - ICS	$ 4,293,814.98	All covered by FDIC			
General Fund Reserve - ICS	4,123,729.00	All covered by FDIC			
Capital Fund - ICS	14,287.68	All covered by FDIC			
Debt Service Fund - ICS	1,070,802.76	All covered by FDIC			
	$ 9,502,634.42				
Lyons National Bank:					
General Fund	$ 838,592.47				
School Food Service-Checking	9,435.28				
Private Purpose Trust-Checking	23,264.72				
ECA-High School	46,794.05				
ECA-Middle School	13,253.56				
	$ 931,340.08	250,000.00	**681,340.08**	**729,034.20**	*updated 3/10/21 for 2/28/21*

Reviewed by:

Richard J. Hartwell

3/10/21
Date

JORDAN - ELBRIDGE CSD

Appropriation Status Detail Report By Function From 7/1/2020 To 2/28/2021

Account	Description		Budget	Adjustments	Adj. Budget	Expensed	Encumbered	Available
A 1010.400-00-000	BOE Contractual Expenses		7,800.00	0.00	7,800.00	1,282.58	0.00	6,517.42
A 1010.450-00-000	BOE Materials & Supplies		1,100.00	12.95	1,112.95	25.90	0.00	1,087.05
1010	**BOARD OF EDUCATION**	*	**8,900.00**	**12.95**	**8,912.95**	**1,308.48**	**0.00**	**7,604.47**
A 1040.160-00-000	District Clerk Salary		5,500.00	0.00	5,500.00	3,666.72	1,833.28	0.00
A 1040.400-00-000	District Clerk Contractual Expenses		1,800.00	0.00	1,800.00	0.00	0.00	1,800.00
A 1040.450-00-000	District Clerk Materials & Supplies		500.00	0.00	500.00	0.00	0.00	500.00
1040	**DISTRICT CLERK**	*	**7,800.00**	**0.00**	**7,800.00**	**3,666.72**	**1,833.28**	**2,300.00**
A 1060.400-00-000	District Meeting Contractual Expense		2,500.00	550.00	3,050.00	541.00	0.00	2,509.00
A 1060.450-00-000	District Meeting Materials & Supplies		300.00	0.00	300.00	0.00	0.00	300.00
1060	**DISTRICT MEETING**	*	**2,800.00**	**550.00**	**3,350.00**	**541.00**	**0.00**	**2,809.00**
10		**	**19,500.00**	**562.95**	**20,062.95**	**5,516.20**	**1,833.28**	**12,713.47**
A 1240.150-00-000	Superintendent Salary		175,115.00	0.00	175,115.00	113,432.00	56,716.00	4,967.00
A 1240.152-00-000	Superintendent Mileage/Insurance		6,000.00	0.00	6,000.00	3,000.00	3,000.00	0.00
A 1240.160-00-000	Superintendent Office Salaries		58,260.00	0.00	58,260.00	35,189.37	575.00	22,495.63
A 1240.400-00-000	Superintendent Contractual		9,000.00	0.00	9,000.00	2,983.35	2,131.91	3,884.74
A 1240.450-00-000	Superintendent Materials & Supplies		1,200.00	0.00	1,200.00	192.96	0.00	1,007.04
1240	**CHIEF SCHOOL ADMINISTRATOR**	*	**249,575.00**	**0.00**	**249,575.00**	**154,797.68**	**62,422.91**	**32,354.41**
12		**	**249,575.00**	**0.00**	**249,575.00**	**154,797.68**	**62,422.91**	**32,354.41**
A 1310.150-00-000	Business Admin.-Instructional Salaries		88,600.00	0.00	88,600.00	54,755.14	31,288.69	2,556.17
A 1310.160-00-000	Business Office Support Salaries		152,000.00	0.00	152,000.00	83,934.84	3,908.28	64,156.88
A 1310.164-00-000	Business Non Instructional Overtime		300.00	0.00	300.00	0.00	0.00	300.00
A 1310.400-00-000	Business Contractual Expenses		3,000.00	1,200.00	4,200.00	2,352.88	187.22	1,659.90
A 1310.450-00-000	Business Office Materials & Supplies		2,200.00	10.25	2,210.25	672.98	80.44	1,456.83
A 1310.490-00-000	BOCES Business Office Services		53,100.00	0.00	53,100.00	58,273.76	0.00	-5,173.76
1310	**BUSINESS ADMINISTRATION**	*	**299,200.00**	**1,210.25**	**300,410.25**	**199,989.60**	**35,464.63**	**64,956.02**
A 1320.400-00-000	Auditing Contractual Expenses		29,500.00	12,150.00	41,650.00	11,650.00	700.00	29,300.00
1320	**AUDITING**	*	**29,500.00**	**12,150.00**	**41,650.00**	**11,650.00**	**700.00**	**29,300.00**
A 1325.160-00-000	Treasurer Salaries		9,335.00	0.00	9,335.00	9,301.36	33.28	0.36
1325	**TREASURER**	*	**9,335.00**	**0.00**	**9,335.00**	**9,301.36**	**33.28**	**0.36**
A 1330.160-00-000	Tax Collector Salaries		1,500.00	0.00	1,500.00	1,000.00	500.00	0.00
A 1330.400-00-000	Tax Collector Contractual Expense		14,000.00	0.00	14,000.00	12,459.74	0.00	1,540.26
1330	**TAX COLLECTOR**	*	**15,500.00**	**0.00**	**15,500.00**	**13,459.74**	**500.00**	**1,540.26**
A 1345.160-00-000	Purchasing Salaries		4,500.00	0.00	4,500.00	3,000.00	1,500.00	0.00

JORDAN - ELBRIDGE CSD

Appropriation Status Detail Report By Function From 7/1/2020 To 2/28/2021

Account	Description		Budget	Adjustments	Adj. Budget	Expensed	Encumbered	Available
A 1345.400-00-000	Purchasing Contractual Expenses		200.00	0.00	200.00	0.00	0.00	200.00
A 1345.490-00-000	BOCES Purchasing Services		4,000.00	0.00	4,000.00	2,382.00	1,588.00	30.00
1345	**PURCHASING**	*	**8,700.00**	**0.00**	**8,700.00**	**5,382.00**	**3,088.00**	**230.00**
13		**	**362,235.00**	**13,360.25**	**375,595.25**	**239,782.70**	**39,785.91**	**96,026.64**
A 1420.400-00-000	Legal Services		65,000.00	3,025.93	68,025.93	8,129.06	23,230.19	36,666.68
A 1420.401-00-000	Financial Advisor		6,000.00	0.00	6,000.00	0.00	0.00	6,000.00
A 1420.490-00-000	BOCES Legal Services		37,000.00	0.00	37,000.00	19,143.29	12,762.17	5,094.54
1420	**LEGAL**	*	**108,000.00**	**3,025.93**	**111,025.93**	**27,272.35**	**35,992.36**	**47,761.22**
A 1430.160-00-000	Personnel Support Salaries		56,575.00	0.00	56,575.00	34,730.64	1,908.28	19,936.08
A 1430.400-00-000	Personnel Support Contractual		34,500.00	4,042.50	38,542.50	17,532.41	6,185.46	14,824.63
A 1430.450-00-000	Personnel Materials & Supplies		2,250.00	38.01	2,288.01	180.34	0.00	2,107.67
A 1430.490-00-000	BOCES Personnel Services		20,000.00	0.00	20,000.00	11,763.22	7,366.78	870.00
1430	**PERSONNEL**	*	**113,325.00**	**4,080.51**	**117,405.51**	**64,206.61**	**15,460.52**	**37,738.38**
A 1460.450-00-000	Records Management Materials		2,500.00	0.00	2,500.00	0.00	0.00	2,500.00
1460	**RECORDS MANAGEMENT OFFICER**	*	**2,500.00**	**0.00**	**2,500.00**	**0.00**	**0.00**	**2,500.00**
A 1480.400-00-000	Public Info Contractual Expenses		1,000.00	0.00	1,000.00	0.00	0.00	1,000.00
A 1480.450-00-000	Public Info Materials & Supplies		500.00	0.00	500.00	0.00	0.00	500.00
A 1480.490-00-000	BOCES Public Info Services		100,200.00	0.00	100,200.00	60,105.06	40,069.94	25.00
1480	**PUBLIC INFORMATION & SERVICES**	*	**101,700.00**	**0.00**	**101,700.00**	**60,105.06**	**40,069.94**	**1,525.00**
14		**	**325,525.00**	**7,106.44**	**332,631.44**	**151,584.02**	**91,522.82**	**89,524.60**
A 1620.160-00-000	Operation of Plant Salaries		705,300.00	0.00	705,300.00	401,348.51	59,045.20	244,906.29
A 1620.164-00-000	Operation of Plant Overtime		35,000.00	0.00	35,000.00	16,520.79	0.00	18,479.21
A 1620.167-00-000	Operation of Plant Summer Help		26,000.00	-900.00	25,100.00	3,776.00	0.00	21,324.00
A 1620.400-00-000	Operation of Plant Contractual Expense		123,000.00	-815.01	122,184.99	48,346.00	38,175.79	35,663.20
A 1620.420-00-000	Electricity		275,000.00	0.00	275,000.00	190,951.95	38,190.39	45,857.66
A 1620.421-00-000	Natural Gas		125,000.00	0.00	125,000.00	84,073.90	16,814.78	24,111.32
A 1620.422-00-000	Water & Sewer		18,500.00	0.00	18,500.00	7,192.75	10,592.88	714.37
A 1620.425-00-000	Trash Removal		22,000.00	900.00	22,900.00	15,035.04	7,864.96	0.00
A 1620.450-00-000	Operations of Plant Materials & Supply		98,000.00	16,181.60	114,181.60	109,963.85	3,833.23	384.52
A 1620.490-00-000	BOCES Operations of Plant Service		0.00	67,135.20	67,135.20	0.00	67,135.20	0.00
1620	**OPERATION OF PLANT**	*	**1,427,800.00**	**82,501.79**	**1,510,301.79**	**877,208.79**	**241,652.43**	**391,440.57**
A 1621.160-00-000	Maintenance Salaries		198,000.00	0.00	198,000.00	119,824.57	575.00	77,600.43
A 1621.163-00-000	O&M-Substitute Salaries		35,000.00	0.00	35,000.00	14,975.02	0.00	20,024.98

JORDAN - ELBRIDGE CSD

Appropriation Status Detail Report By Function From 7/1/2020 To 2/28/2021

Account	Description		Budget	Adjustments	Adj. Budget	Expensed	Encumbered	Available
A 1621.164-00-000	Maintenance Overtime		25,000.00	0.00	25,000.00	9,736.13	0.00	15,263.87
A 1621.168-00-000	Maintenance Snow Removal		12,500.00	0.00	12,500.00	1,914.64	0.00	10,585.36
A 1621.200-00-000	Maintenance Equipment		5,000.00	17,812.06	22,812.06	396.00	22,306.06	110.00
A 1621.400-00-000	Maintenance Contractual		145,000.00	65,797.80	210,797.80	119,070.39	64,336.65	27,390.76
A 1621.450-00-000	Maintenance Materials & Supplies		85,000.00	2,011.48	87,011.48	67,825.86	13,471.84	5,713.78
A 1621.500-00-000	Maintenance-Fuel		15,500.00	0.00	15,500.00	5,414.30	9,585.70	500.00
1621	**MAINTENANCE OF PLANT**	*	**521,000.00**	**85,621.34**	**606,621.34**	**339,156.91**	**110,275.25**	**157,189.18**
A 1660.160-00-000	Central Storeroom Salaries		8,900.00	0.00	8,900.00	0.00	0.00	8,900.00
1660	**CENTRAL STOREROOM**	*	**8,900.00**	**0.00**	**8,900.00**	**0.00**	**0.00**	**8,900.00**
A 1670.160-00-000	Central Printing & Mailing Salaries		8,900.00	0.00	8,900.00	9,791.31	287.50	-1,178.81
A 1670.400-00-000	Central Printing Contractual		8,600.00	0.00	8,600.00	6,450.00	2,100.00	50.00
A 1670.450-00-000	Central Printing Materials & Supplies		500.00	0.00	500.00	138.00	227.00	135.00
A 1670.451-00-000	Postage & Express Delivery		25,000.00	0.00	25,000.00	6,345.34	15,654.66	3,000.00
1670	**CENTRAL PRINTING & MAILING**	*	**43,000.00**	**0.00**	**43,000.00**	**22,724.65**	**18,269.16**	**2,006.19**
A 1680.160-00-000	Central Data Processing Salaries		6,000.00	0.00	6,000.00	4,000.00	2,000.00	0.00
A 1680.220-00-000	Central Data Processing Hardware		3,500.00	0.00	3,500.00	0.00	0.00	3,500.00
A 1680.400-00-000	Computer Contractual Expenses		15,000.00	-1,379.99	13,620.01	2,361.64	1,010.92	10,247.45
A 1680.450-00-000	Computer Materials & Supplies		1,000.00	100.00	1,100.00	1,082.64	0.00	17.36
A 1680.490-00-000	BOCES Central Data Processing Service		477,500.00	0.00	477,500.00	254,625.19	146,947.22	75,927.59
1680	**CENTRAL DATA PROCESSING**	*	**503,000.00**	**-1,279.99**	**501,720.01**	**262,069.47**	**149,958.14**	**89,692.40**
16		**	**2,503,700.00**	**166,843.14**	**2,670,543.14**	**1,501,159.82**	**520,154.98**	**649,228.34**
A 1910.426-00-000	Liability Insurance		129,000.00	0.00	129,000.00	117,227.98	0.00	11,772.02
1910	**UNALLOCATED INSURANCE**	*	**129,000.00**	**0.00**	**129,000.00**	**117,227.98**	**0.00**	**11,772.02**
A 1920.400-00-000	School Association Dues		10,000.00	0.00	10,000.00	8,954.00	0.00	1,046.00
1920	**SCHOOL ASSOCIATION DUES**	*	**10,000.00**	**0.00**	**10,000.00**	**8,954.00**	**0.00**	**1,046.00**
A 1930.400-00-000	Judgements & Claims		1,000.00	0.00	1,000.00	0.00	0.00	1,000.00
1930	**JUDGMENTS & CLAIMS**	*	**1,000.00**	**0.00**	**1,000.00**	**0.00**	**0.00**	**1,000.00**
A 1981.490-00-000	BOCES Administrative Services		270,500.00	0.00	270,500.00	245,068.01	25,161.43	270.56
1981	**BOCES ADMINISTRATIVE COSTS**	*	**270,500.00**	**0.00**	**270,500.00**	**245,068.01**	**25,161.43**	**270.56**
19		**	**410,500.00**	**0.00**	**410,500.00**	**371,249.99**	**25,161.43**	**14,088.58**
1		***	**3,871,035.00**	**187,872.78**	**4,058,907.78**	**2,424,090.41**	**740,881.33**	**893,936.04**
A 2010.150-00-000	Curriculum Development-Professional Salaries		99,220.00	0.00	99,220.00	50,534.48	0.00	48,685.52
A 2010.151-00-000	Team Leaders, Mentors, IB Coordinators Salaries		40,520.00	0.00	40,520.00	0.00	14,749.00	25,771.00

JORDAN - ELBRIDGE CSD

Appropriation Status Detail Report By Function From 7/1/2020 To 2/28/2021

Account	Description		Budget	Adjustments	Adj. Budget	Expensed	Encumbered	Available
A 2010.400-00-000	Curriculum Development Contractual		500.00	0.00	500.00	0.00	0.00	500.00
A 2010.450-00-000	Curriculum Develop Materials & Supply		1,400.00	0.00	1,400.00	0.00	0.00	1,400.00
2010	**CURRICULUM DEVEL & SUPERVISION**	*	**141,640.00**	**0.00**	**141,640.00**	**50,534.48**	**14,749.00**	**76,356.52**
A 2020.150-00-000	Principal & Ass't Supt Salaries		0.00	75.00	75.00	75.00	0.00	0.00
A 2020.150-10-000	Supervision-Professional Salaries-EE		92,250.00	0.00	92,250.00	60,423.26	28,333.36	3,493.38
A 2020.150-20-000	Supervision-Professional Salaries-MS		132,750.00	0.00	132,750.00	86,106.08	43,052.92	3,591.00
A 2020.150-30-000	Supervision-Professional Salaries-HS		150,605.00	0.00	150,605.00	97,688.80	48,844.20	4,072.00
A 2020.160-10-000	Supervision-Support Salaries-EE		61,600.00	0.00	61,600.00	39,799.07	19,981.09	1,819.84
A 2020.160-15-000	Supervision-Support Salaries-JEDIS		23,750.00	0.00	23,750.00	12,037.59	7,650.83	4,061.58
A 2020.160-20-000	Supervision-Support Salaries-MS		30,300.00	0.00	30,300.00	20,214.19	10,063.58	22.23
A 2020.160-30-000	Supervision-Support Salaries-HS		34,200.00	0.00	34,200.00	22,444.64	11,283.30	472.06
A 2020.163-00-000	Clerical Sub. Salaries		8,000.00	-75.00	7,925.00	100.00	0.00	7,825.00
A 2020.165-10-000	SRO Salaries-EE		46,000.00	0.00	46,000.00	22,672.50	0.00	23,327.50
A 2020.165-15-000	SRO Salaries-JEDIS		15,000.00	-15,000.00	0.00	0.00	0.00	0.00
A 2020.165-20-000	SRO Salaries-MS		46,000.00	46,000.00	92,000.00	48,180.00	0.00	43,820.00
A 2020.165-30-000	SRO Salaries-HS		60,000.00	0.00	60,000.00	30,000.00	20,000.00	10,000.00
A 2020.400-00-000	Supervision Contractual		16,000.00	-1,800.00	14,200.00	5,000.00	0.00	9,200.00
A 2020.400-10-000	Supervision Elbridge Elem Contractual		835.00	100.00	935.00	994.39	370.91	-430.30
A 2020.400-15-000	Supervision-JEDIS-Contractual		500.00	-500.00	0.00	0.00	0.00	0.00
A 2020.400-20-000	Supervision Middle School Contractual		1,000.00	500.00	1,500.00	1,061.49	373.75	64.76
A 2020.400-30-000	Supervision High School Contractual		1,500.00	2,404.00	3,904.00	3,223.22	336.02	344.76
A 2020.450-00-000	Supervision Materials & Supplies		23,800.00	-500.00	23,300.00	0.00	0.00	23,300.00
A 2020.450-10-000	Supervision Elbridge Materials		1,335.00	-188.88	1,146.12	552.54	0.00	593.58
A 2020.450-15-000	Supervision-JEDIS-Materials & Supplies		500.00	0.00	500.00	415.40	0.00	84.60
A 2020.450-20-000	Supervision Middle School Materials		2,500.00	-500.00	2,000.00	425.49	0.00	1,574.51
A 2020.450-30-000	Supervision High School Materials		2,750.00	1,628.23	4,378.23	1,831.18	1,813.60	733.45
2020	**SUPERVISION-REGULAR SCHOOL**	*	**751,175.00**	**32,143.35**	**783,318.35**	**453,244.84**	**192,103.56**	**137,969.95**
A 2060.490-00-000	BOCES Research Plan Service		104,000.00	0.00	104,000.00	39,439.18	26,232.63	38,328.19
2060	**RESEARCH, PLANNING & EVALUAT**	*	**104,000.00**	**0.00**	**104,000.00**	**39,439.18**	**26,232.63**	**38,328.19**
A 2070.151-00-000	Inservice Training Salaries		20,000.00	1,157.56	21,157.56	0.00	0.00	21,157.56
A 2070.400-00-000	Inservice Training Contractual		10,000.00	11,904.81	21,904.81	1,617.05	0.00	20,287.76
A 2070.450-00-000	Inservice Materials & Supplies		4,000.00	0.00	4,000.00	0.00	0.00	4,000.00
A 2070.490-00-000	BOCES Inservice Training Service		29,000.00	800.00	29,800.00	11,282.69	6,271.78	12,245.53

JORDAN - ELBRIDGE CSD

Appropriation Status Detail Report By Function From 7/1/2020 To 2/28/2021

Account	Description		Budget	Adjustments	Adj. Budget	Expensed	Encumbered	Available
2070	**INSERVICE TRAINING-INSTRUCTION**	*	**63,000.00**	**13,862.37**	**76,862.37**	**12,899.74**	**6,271.78**	**57,690.85**
20		**	**1,059,815.00**	**46,005.72**	**1,105,820.72**	**556,118.24**	**239,356.97**	**310,345.51**
A 2110.120-10-000	Teacher Salaries-Gr K-3-EE		1,610,000.00	-308,972.00	1,301,028.00	629,294.63	574,084.58	97,648.79
A 2110.120-10-CAR	Teacher Salaries-Gr K-3-EE CARES Act		0.00	127,608.00	127,608.00	63,804.24	63,803.76	0.00
A 2110.120-15-000	Teacher Salaries-Gr 4-5-JEDIS		716,000.00	230,000.00	946,000.00	494,862.19	449,716.44	1,421.37
A 2110.120-20-000	Teacher Salaries-Gr 6-MS		450,000.00	-26,000.00	424,000.00	204,841.61	163,413.48	55,744.91
A 2110.127-10-000	Reg School-TA Salaries-Gr K-3-EE		0.00	82,000.00	82,000.00	48,694.82	32,431.95	873.23
A 2110.127-15-000	Reg School-TA Salaries-Gr 4-5-JEDIS		0.00	0.00	0.00	13,510.42	8,992.48	-22,502.90
A 2110.127-20-000	Reg School-TA Salaries-Gr 6-MS		0.00	10,000.00	10,000.00	5,893.56	3,929.01	177.43
A 2110.130-20-000	Reg School-Teacher Salaries-Gr 7-8-MS		1,018,000.00	-26,000.00	992,000.00	518,251.20	411,683.12	62,065.68
A 2110.130-30-000	Reg School-Teacher Salaries-Gr 9-12-HS		2,136,000.00	-223,572.00	1,912,428.00	993,663.88	841,663.40	77,100.72
A 2110.130-30-CAR	Reg School-Teacher Salaries-Gr 9-12-HS-CARES Act		0.00	123,572.00	123,572.00	68,152.08	55,419.92	0.00
A 2110.137-20-000	Reg School-TA Salaries-Gr 7-8-MS		23,000.00	10,000.00	33,000.00	10,887.55	21.70	22,090.75
A 2110.137-30-000	Reg School-TA Salaries-Gr 9-12-HS		24,000.00	0.00	24,000.00	13,558.16	9,392.48	1,049.36
A 2110.140-00-000	Substitute Teacher Salaries		0.00	0.00	0.00	150.00	0.00	-150.00
A 2110.140-10-000	Substitute Teacher & TA Salaries-EE		81,000.00	0.00	81,000.00	46,910.52	0.00	34,089.48
A 2110.140-15-000	Substitute Teacher & TA Salaries-JEDIS		30,000.00	0.00	30,000.00	23,519.50	0.00	6,480.50
A 2110.140-20-000	Substitute Teacher & TA Salaries-MS		91,000.00	0.00	91,000.00	39,901.50	0.00	51,098.50
A 2110.140-30-000	Substitute Teacher & TA Salaries-HS		65,000.00	0.00	65,000.00	24,226.00	0.00	40,774.00
A 2110.144-00-000	Other Instruction Sal Outside WD		36,000.00	-157.56	35,842.44	2,136.92	0.00	33,705.52
A 2110.151-00-000	Mentors Salaries		0.00	0.00	0.00	0.00	0.00	0.00
A 2110.160-10-000	Teacher Aide Salaries-EE		0.00	25,845.00	25,845.00	14,433.50	0.00	11,411.50
A 2110.160-15-000	Teacher Aide Salaries-JEDIS		0.00	30,545.00	30,545.00	18,077.89	0.00	12,467.11
A 2110.200-00-000	Tchg Reg School Equipment		0.00	5,000.00	5,000.00	0.00	0.00	5,000.00
A 2110.200-20-000	Tchg Reg School-Equipment-MS		4,000.00	0.00	4,000.00	0.00	0.00	4,000.00
A 2110.400-00-000	Tchg Reg School Contractual		80,000.00	3,450.00	83,450.00	0.00	3,450.00	80,000.00
A 2110.400-10-000	TchgReg School-Contractual-EE		4,335.00	50.00	4,385.00	650.00	0.00	3,735.00
A 2110.400-15-000	Tchg-Reg School-Contractual-JEDIS		4,000.00	-3,004.00	996.00	693.00	0.00	303.00
A 2110.400-20-000	Tchg Reg School-Contractual-MS		5,000.00	0.00	5,000.00	509.72	0.00	4,490.28
A 2110.400-28-000	Tchg-Reg School-IB Contractual-MS		20,000.00	0.00	20,000.00	0.00	10,050.00	9,950.00
A 2110.400-30-000	Tchg-Reg School-Contractual-HS		15,000.00	-5,767.80	9,232.20	6,710.50	1,153.00	1,368.70
A 2110.450-00-000	Tchg Reg School Materials & Supplies		0.00	504.40	504.40	0.00	0.00	504.40
A 2110.450-10-000	Reg School-Supplies-EE		32,835.00	-14,599.52	18,235.48	13,579.11	3,235.45	1,420.92

Account	Description		Budget	Adjustments	Adj. Budget	Expensed	Encumbered	Available
A 2110.450-10-222	Reg School-PBIS Supplies-EE		0.00	1,800.00	1,800.00	0.00	807.13	992.87
A 2110.450-15-000	Reg School-Supplies-JEDIS		15,730.00	6,129.34	21,859.34	16,847.28	3,966.95	1,045.11
A 2110.450-15-222	Reg School-PBIS Supplies-JEDIS		0.00	0.00	0.00	0.00	373.88	-373.88
A 2110.450-20-000	Reg School-Supplies-MS		15,000.00	17,146.51	32,146.51	18,123.08	333.74	13,689.69
A 2110.450-30-000	Reg School-Supplies-HS		49,000.00	10,479.18	59,479.18	17,833.04	11,587.50	30,058.64
A 2110.471-00-000	Tuition Paid NYS Public School-Regular Ed		30,000.00	10,555.00	40,555.00	0.00	10,555.00	30,000.00
A 2110.480-10-000	Reg School-Textbooks-EE		16,675.00	29,260.52	45,935.52	31,415.43	431.95	14,088.14
A 2110.480-15-000	Reg School-Textbooks-JEDIS		12,000.00	15,809.63	27,809.63	20,212.88	856.31	6,740.44
A 2110.480-20-000	Reg School-Textbooks-MS		28,000.00	2,932.95	30,932.95	11,405.83	2,000.00	17,527.12
A 2110.480-30-000	Reg School-Textbooks-HS		22,786.00	3,832.65	26,618.65	6,206.69	0.00	20,411.96
A 2110.489-00-000	Private School Textbooks		2,000.00	0.00	2,000.00	345.96	79.75	1,574.29
A 2110.490-00-000	BOCES Tchg Reg School Service		235,148.00	2,771.50	237,919.50	137,212.81	89,962.96	10,743.73
2110	**TEACHING-REGULAR SCHOOL**	*	**6,871,509.00**	**141,218.80**	**7,012,727.80**	**3,516,515.50**	**2,753,395.94**	**742,816.36**
21		**	**6,871,509.00**	**141,218.80**	**7,012,727.80**	**3,516,515.50**	**2,753,395.94**	**742,816.36**
A 2250.150-10-000	SWD-Teacher Salaries-EE		409,000.00	48,750.00	457,750.00	244,895.38	212,500.14	354.48
A 2250.150-15-000	SWD-Teacher Salaries-JEDIS		147,000.00	2,748.96	149,748.96	81,799.96	67,949.00	0.00
A 2250.150-20-000	SWD-Teacher Salaries-MS		184,500.00	2,251.04	186,751.04	102,263.29	84,348.46	139.29
A 2250.150-30-000	SWD-Teacher Salaries-HS		156,000.00	1,250.00	157,250.00	84,959.66	70,829.24	1,461.10
A 2250.157-10-000	SWD-TA Salaries-EE		210,000.00	-68,345.00	141,655.00	84,021.10	56,648.06	985.84
A 2250.157-15-000	SWD-TA Salaries-JEDIS		123,000.00	-30,545.00	92,455.00	53,202.16	36,462.22	2,790.62
A 2250.157-20-000	SWD-TA Salaries-MS		66,000.00	0.00	66,000.00	26,382.31	16,545.74	23,071.95
A 2250.160-00-000	SWD Support Salaries		0.00	0.00	0.00	403.92	0.00	-403.92
A 2250.400-00-000	SWD Contractual Expense		60,000.00	20,065.00	80,065.00	11,563.20	41,875.67	26,626.13
A 2250.450-00-000	SWD Materials & Supplies		20,000.00	-12,500.00	7,500.00	2,240.72	0.00	5,259.28
A 2250.471-00-000	SWD Tuition Paid NYS Public School		10,000.00	0.00	10,000.00	0.00	0.00	10,000.00
A 2250.472-00-000	SWD Tuition Paid Other		120,000.00	40,695.00	160,695.00	4,591.46	40,695.00	115,408.54
A 2250.490-00-000	BOCES SWD Service		1,875,000.00	0.00	1,875,000.00	1,029,064.74	706,773.88	139,161.38
2250	**PROGRAMS-STUDENTS W/ DISABIL**	*	**3,380,500.00**	**4,370.00**	**3,384,870.00**	**1,725,387.90**	**1,334,627.41**	**324,854.69**
A 2259.150-10-000	ELL-Instructional Salaries-Elbridge		31,370.00	0.00	31,370.00	18,670.56	12,446.94	252.50
A 2259.150-15-000	ELL-Instructional Salaries-JEDIS		12,550.00	0.00	12,550.00	7,468.20	4,978.80	103.00
A 2259.150-20-000	ELL-Instructional Salaries-Middle School		12,550.00	0.00	12,550.00	7,468.20	4,978.80	103.00
A 2259.150-30-000	ELL-Instructional Salaries-High School		6,275.00	0.00	6,275.00	3,734.04	2,489.46	51.50
2259		*	**62,745.00**	**0.00**	**62,745.00**	**37,341.00**	**24,894.00**	**510.00**

Account	Description		Budget	Adjustments	Adj. Budget	Expensed	Encumbered	Available
A 2280.490-00-000	Career & Technical Ed -BOCES Services		830,000.00	0.00	830,000.00	477,655.62	318,437.08	33,907.30
2280	**OCCUPATIONAL EDUCATION**	*	**830,000.00**	**0.00**	**830,000.00**	**477,655.62**	**318,437.08**	**33,907.30**
22		**	**4,273,245.00**	**4,370.00**	**4,277,615.00**	**2,240,384.52**	**1,677,958.49**	**359,271.99**
A 2330.150-30-000	Special Schools-Instructional Salaries-HS		20,000.00	-20,000.00	0.00	0.00	0.00	0.00
A 2330.490-00-000	BOCES Special Schools Services		0.00	20,000.00	20,000.00	7,225.00	0.00	12,775.00
2330	**TEACHING-SPECIAL SCHOOLS**	*	**20,000.00**	**0.00**	**20,000.00**	**7,225.00**	**0.00**	**12,775.00**
23		**	**20,000.00**	**0.00**	**20,000.00**	**7,225.00**	**0.00**	**12,775.00**
A 2610.150-10-000	Librarian Salaries-Elbridge Elem		74,410.00	0.00	74,410.00	0.00	0.00	74,410.00
A 2610.150-15-000	Librarian Salaries-JEDIS		27,220.00	0.00	27,220.00	0.00	0.00	27,220.00
A 2610.150-20-000	Librarian Salaries-Middle School		40,830.00	0.00	40,830.00	0.00	0.00	40,830.00
A 2610.150-30-000	Librarian Salaries-High School		70,360.00	-69,761.00	599.00	0.00	0.00	599.00
A 2610.150-30-CAR	Librarian Salaries-High School-CARES Act		0.00	69,761.00	69,761.00	41,856.60	27,904.40	0.00
A 2610.450-20-000	Library & AV Middle School Materials		125.00	0.00	125.00	0.00	40.86	84.14
A 2610.450-30-000	Library & AV High School Materials		250.00	0.00	250.00	0.00	0.00	250.00
A 2610.460-10-000	Library EE State Aid Library Materials		1,944.00	0.00	1,944.00	0.00	1,940.00	4.00
A 2610.460-15-000	Libary Books-JEDIS		1,025.00	0.00	1,025.00	0.00	0.00	1,025.00
A 2610.460-20-000	Library MS State Aid Library Materials		2,500.00	0.00	2,500.00	0.00	0.00	2,500.00
A 2610.460-30-000	Library HS State Aid Library Materials		5,000.00	0.00	5,000.00	0.00	0.00	5,000.00
A 2610.490-00-000	BOCES Library & AV Service		73,400.00	0.00	73,400.00	41,160.37	31,563.23	676.40
A 2610.490-10-000	BOCES Library & AV- Elbridge		8,400.00	-7,450.00	950.00	902.06	0.00	47.94
A 2610.490-15-000	Library & AV-BOCES Service-JEDIS		350.00	0.00	350.00	348.60	0.00	1.40
A 2610.490-20-000	BOCESLibrary & AV Middle School		2,000.00	0.00	2,000.00	1,456.46	0.00	543.54
A 2610.490-30-000	BOCES Library & AV High School		3,500.00	0.00	3,500.00	3,477.33	0.00	22.67
2610	**SCHOOL LIBRARY & AUDIOVISUAL**	*	**311,314.00**	**-7,450.00**	**303,864.00**	**89,201.42**	**61,448.49**	**153,214.09**
A 2630.160-10-000	CAI-Salaries-EE		50,700.00	0.00	50,700.00	31,556.80	0.00	19,143.20
A 2630.160-15-000	CAI-Salaries-JEDIS		37,820.00	0.00	37,820.00	24,525.76	12,262.82	1,031.42
A 2630.160-20-000	CAI-Salaries-MS		65,215.00	-80.82	65,134.18	36,788.48	18,394.40	9,951.30
A 2630.160-30-000	CAI-Salaries-HS		61,750.00	0.00	61,750.00	40,862.08	20,430.92	457.00
A 2630.162-20-000	Director of IT-Mileage		500.00	0.00	500.00	333.28	166.72	0.00
A 2630.164-10-000	CAI-Non-Insructional Overtime-EE		500.00	80.82	580.82	580.82	0.00	0.00
A 2630.200-00-000	CAI Equipment		3,000.00	0.00	3,000.00	0.00	2,623.00	377.00
A 2630.220-00-000	Computer Hardware		27,000.00	-749.75	26,250.25	3,359.80	0.00	22,890.45
A 2630.450-00-000	CAI Materials & Supplies		18,000.00	10,740.57	28,740.57	17,125.67	3,949.01	7,665.89

Account	Description		Budget	Adjustments	Adj. Budget	Expensed	Encumbered	Available
A 2630.460-00-000	Computer Software		25,000.00	-6,779.00	18,221.00	9,340.39	0.00	8,880.61
A 2630.490-00-000	BOCES CAI Technology Service		575,220.00	104,793.75	680,013.75	337,674.12	182,704.08	159,635.55
2630	**COMPUTER ASSISTED INSTRUCTION**	*	**864,705.00**	**108,005.57**	**972,710.57**	**502,147.20**	**240,530.95**	**230,032.42**
26		**	**1,176,019.00**	**100,555.57**	**1,276,574.57**	**591,348.62**	**301,979.44**	**383,246.51**
A 2810.150-10-000	Guidance-Prof Salaries-EE		113,000.00	0.00	113,000.00	53,846.52	53,846.28	5,307.20
A 2810.150-15-000	Guidance-Prof Salaries-JEDIS		27,800.00	0.00	27,800.00	16,498.56	10,999.04	302.40
A 2810.150-20-000	Guidance-Prof Salaries-MS		46,600.00	0.00	46,600.00	29,542.32	16,498.56	559.12
A 2810.150-30-000	Guidance-Prof Salaries-HS		198,500.00	7,260.00	205,760.00	109,634.23	93,634.19	2,491.58
A 2810.160-30-000	Guidance-Support Staff-HS		32,250.00	0.00	32,250.00	21,097.57	10,870.57	281.86
A 2810.400-30-000	Guidance High School Contractual		375.00	0.00	375.00	50.00	0.00	325.00
A 2810.450-10-000	Guidance-Supplies-EE		300.00	68.37	368.37	68.37	0.00	300.00
A 2810.450-20-000	Guidance -Supplies-MS		300.00	0.00	300.00	0.00	0.00	300.00
A 2810.450-30-000	Guidance-Supplies-HS		250.00	0.00	250.00	245.46	0.00	4.54
2810	**GUIDANCE-REGULAR SCHOOL**	*	**419,375.00**	**7,328.37**	**426,703.37**	**230,983.03**	**185,848.64**	**9,871.70**
A 2815.160-00-000	Nurses Salaries		0.00	0.00	0.00	64.00	0.00	-64.00
A 2815.160-10-000	Nurses Salaries-EE		47,500.00	0.00	47,500.00	22,529.56	21,169.44	3,801.00
A 2815.160-15-000	Nurses Salaries-JEDIS		15,900.00	0.00	15,900.00	7,917.84	7,917.76	64.40
A 2815.160-20-000	Nurses Salaries-MS		24,100.00	0.00	24,100.00	11,876.64	11,876.76	346.60
A 2815.160-30-000	Nurses Salaries-HS		42,500.00	0.00	42,500.00	25,702.89	15,991.60	805.51
A 2815.400-00-000	Health Services Contractual		15,000.00	1,359.32	16,359.32	0.00	5,559.32	10,800.00
A 2815.400-10-000	Health Services-Contractual-EE		100.00	0.00	100.00	0.00	0.00	100.00
A 2815.400-20-000	Health Services-Contractual-MS		100.00	0.00	100.00	0.00	0.00	100.00
A 2815.400-30-000	Health Services-Contractual-HS		100.00	0.00	100.00	0.00	0.00	100.00
A 2815.450-00-000	Health Services Materials		0.00	5,495.00	5,495.00	0.00	0.00	5,495.00
A 2815.450-10-000	Nurses-Supplies-EE		900.00	0.00	900.00	118.99	0.00	781.01
A 2815.450-20-000	Nurses-Supplies-MS		2,000.00	0.00	2,000.00	166.69	109.19	1,724.12
A 2815.450-30-000	Nurses-Supplies-HS		500.00	592.52	1,092.52	284.47	0.00	808.05
2815	**HEALTH SERVICES-REGULAR SCHOOL**	*	**148,700.00**	**7,446.84**	**156,146.84**	**68,661.08**	**62,624.07**	**24,861.69**
A 2820.150-10-000	Psychologist-Salaries-EE		79,600.00	0.00	79,600.00	38,274.60	38,274.40	3,051.00
A 2820.150-20-000	Psychologist-Salaries-MS		45,500.00	0.00	45,500.00	22,421.04	22,420.96	658.00
A 2820.150-30-000	Psychologist-Salaries-HS		19,500.00	0.00	19,500.00	9,609.00	9,609.00	282.00
A 2820.450-10-000	Psychologist Elbridge Materials		250.00	0.00	250.00	0.00	0.00	250.00
2820	**PSYCHOLOGICAL SRVC-REG SCHOOL**	*	**144,850.00**	**0.00**	**144,850.00**	**70,304.64**	**70,304.36**	**4,241.00**

Account	Description	Budget	Adjustments	Adj. Budget	Expensed	Encumbered	Available
A 2825.150-15-000	Social Worker Salaries-JEDIS	30,000.00	1,500.00	31,500.00	18,896.16	12,597.47	6.37
A 2825.150-20-000	Social Worker Salaries-MS	37,000.00	-379.00	36,621.00	21,972.24	14,648.26	0.50
A 2825.150-30-000	Social Worker Salaries-HS	0.00	243.00	243.00	121.56	121.44	0.00
A 2825.400-30-000	Social Worker High School Contractual	0.00	4.75	4.75	4.75	0.00	0.00
2825	**SOCIAL WORK SRVC-REG SCHOOL ***	**67,000.00**	**1,368.75**	**68,368.75**	**40,994.71**	**27,367.17**	**6.87**
A 2850.150-00-000	Cocurricular Instructional Salaries	0.00	0.00	0.00	0.00	0.00	0.00
A 2850.150-10-000	Cocurricular Instructional Salaries-EE	985.00	0.00	985.00	0.00	0.00	985.00
A 2850.150-15-000	Cocurricular Instructional Salaries-JEDIS	2,330.00	0.00	2,330.00	0.00	0.00	2,330.00
A 2850.150-20-000	Cocurricular Instructional Salaries-MS	9,600.00	-5,000.00	4,600.00	569.40	379.60	3,651.00
A 2850.150-30-000	Cocurricular Instructional Salaries-HS	55,100.00	-35,000.00	20,100.00	14,127.25	5,437.08	535.67
A 2850.150-33-000	Marching Band Salaries	42,000.00	0.00	42,000.00	13,710.87	5,857.13	22,432.00
A 2850.156-10-000	Co-Curricular-Proctor Pay-Elbridge	7,000.00	0.00	7,000.00	0.00	0.00	7,000.00
A 2850.156-15-000	Co-Curricular-Proctor Pay-JEDIS	1,500.00	0.00	1,500.00	318.24	0.00	1,181.76
A 2850.156-20-000	Co-Curricular-Proctor Pay-Middle School	13,000.00	0.00	13,000.00	336.96	0.00	12,663.04
A 2850.156-30-000	Co-Curricular-Proctor Pay-High School	12,000.00	0.00	12,000.00	432.22	0.00	11,567.78
A 2850.160-20-000	CoCurricular Support Salaries-MS	500.00	0.00	500.00	333.28	166.72	0.00
A 2850.160-30-000	CoCurricular Support Salaries-HS	2,810.00	0.00	2,810.00	1,000.00	500.00	1,310.00
A 2850.200-33-000	Marching Band-Equipment	4,000.00	0.00	4,000.00	0.00	0.00	4,000.00
A 2850.400-30-000	CoCurricular High School Contractual	2,000.00	-571.50	1,428.50	0.00	1,264.00	164.50
A 2850.400-33-000	Marching Band Contractual	25,000.00	0.00	25,000.00	5,874.39	0.00	19,125.61
A 2850.450-30-000	CoCurricular High School Materials	2,500.00	0.00	2,500.00	0.00	0.00	2,500.00
A 2850.450-33-000	Marching Band Materials & Supplies	12,000.00	3,083.14	15,083.14	1,393.92	1,699.00	11,990.22
2850	**CO-CURRICULAR ACTIV-REG SCHL ***	**192,325.00**	**-37,488.36**	**154,836.64**	**38,096.53**	**15,303.53**	**101,436.58**
A 2855.150-00-000	Interscholastic Instructional Salaries	0.00	0.00	0.00	0.00	0.00	0.00
A 2855.150-20-000	Coaches Salaries-Modified	61,550.00	0.00	61,550.00	7,218.00	11,228.00	43,104.00
A 2855.150-30-000	Coaches Salaries-Varsity & JV	190,400.00	0.00	190,400.00	24,464.80	31,383.60	134,551.60
A 2855.151-30-000	Interscholastic Athletics-AD Salary	44,535.00	0.00	44,535.00	28,885.44	14,442.56	1,207.00
A 2855.156-00-000	Interscholastic Athletics-Proctor & SRO Pay	54,000.00	-31,000.00	23,000.00	2,178.86	0.00	20,821.14
A 2855.160-30-000	Interscholastic Athletics-Support Salaries-HS	64,480.00	0.00	64,480.00	42,052.13	31,260.86	-8,832.99
A 2855.200-00-000	Interscholastic Athletics Equipment	4,125.00	0.00	4,125.00	0.00	0.00	4,125.00
A 2855.400-00-000	Interscholastic Athletics Contractual	79,200.00	1,124.76	80,324.76	5,699.74	4,682.38	69,942.64
A 2855.450-00-000	Interscholastic Athletic Materials	46,000.00	18,436.92	64,436.92	22,138.92	3,908.06	38,389.94
2855	**INTERSCHOL ATHLETICS-REG SCHL ***	**544,290.00**	**-11,438.32**	**532,851.68**	**132,637.89**	**96,905.46**	**303,308.33**

Account	Description		Budget	Adjustments	Adj. Budget	Expensed	Encumbered	Available
28		**	**1,516,540.00**	**-32,782.72**	**1,483,757.28**	**581,677.88**	**458,353.23**	**443,726.17**
2		***	**14,917,128.00**	**259,367.37**	**15,176,495.37**	**7,493,269.76**	**5,431,044.07**	**2,252,181.54**
A 5510.160-00-000	Transportation Salaries		1,160,000.00	0.00	1,160,000.00	717,793.83	0.00	442,206.17
A 5510.160-00-001	Transportation Supervisor & Office Salary		126,000.00	0.00	126,000.00	78,294.07	23,471.42	24,234.51
A 5510.161-00-000	Transportation Extra Trip Salaries		48,600.00	0.00	48,600.00	6,476.25	0.00	42,123.75
A 5510.163-00-000	Transportation Substitutes		60,000.00	0.00	60,000.00	12,987.23	0.00	47,012.77
A 5510.164-00-000	Transportation Overtime		14,600.00	0.00	14,600.00	1,929.00	0.00	12,671.00
A 5510.167-00-000	Transportation Summer Help		19,000.00	0.00	19,000.00	2,548.80	0.00	16,451.20
A 5510.200-00-000	Transportation - Equipment		0.00	33,954.00	33,954.00	33,954.00	0.00	0.00
A 5510.210-00-000	Transportation-Bus Purchases		405,000.00	0.00	405,000.00	403,938.54	0.00	1,061.46
A 5510.400-00-000	Transportation Contractual Expenses		54,400.00	17,300.16	71,700.16	26,424.33	10,312.02	34,963.81
A 5510.426-00-000	Transportation Insurance		40,000.00	0.00	40,000.00	31,625.30	0.00	8,374.70
A 5510.438-00-000	Transportation Physicals		4,500.00	-3,918.00	582.00	164.00	0.00	418.00
A 5510.439-00-000	Transportation Repairs on Buses		7,000.00	0.00	7,000.00	0.00	243.90	6,756.10
A 5510.450-00-000	Transportation Materials & Supplies		17,000.00	6,394.24	23,394.24	18,466.63	91.80	4,835.81
A 5510.500-00-000	Vehicle Fuel		166,400.00	0.00	166,400.00	36,914.88	63,989.35	65,495.77
A 5510.501-00-000	Oil, Lubricants, Additives, DEF...		5,500.00	0.00	5,500.00	1,518.00	414.00	3,568.00
A 5510.502-00-000	Vehicle Parts		21,500.00	236.39	21,736.39	9,737.10	1,397.72	10,601.57
A 5510.503-00-000	Vehicle Tires		10,000.00	2,615.50	12,615.50	5,371.50	642.00	6,602.00
A 5510.504-00-000	Transportation-Snow Removals Salt/Sand		5,500.00	0.00	5,500.00	0.00	0.00	5,500.00
5510	**DISTRICT TRANSPORT-MEDICAID**	*	**2,165,000.00**	**56,582.29**	**2,221,582.29**	**1,388,143.46**	**100,562.21**	**732,876.62**
A 5530.160-00-000	Mechanic Salaries		110,000.00	0.00	110,000.00	68,824.13	575.00	40,600.87
A 5530.168-00-000	Bus Garage Snow Removal Stipends		6,900.00	0.00	6,900.00	4,600.00	2,300.00	0.00
A 5530.400-00-000	Bus Garage Contractual & Insurance		15,000.00	0.00	15,000.00	8,547.63	2,194.48	4,257.89
A 5530.420-00-000	Bus Garage Electric & Gas		16,000.00	0.00	16,000.00	10,477.20	2,095.44	3,427.36
5530	**GARAGE BUILDING**	*	**147,900.00**	**0.00**	**147,900.00**	**92,448.96**	**7,164.92**	**48,286.12**
A 5581.490-00-000	BOCES Transportation Services		18,000.00	0.00	18,000.00	10,173.00	6,782.00	1,045.00
5581	**TRANSPORTATION FROM BOCES**	*	**18,000.00**	**0.00**	**18,000.00**	**10,173.00**	**6,782.00**	**1,045.00**
55		**	**2,330,900.00**	**56,582.29**	**2,387,482.29**	**1,490,765.42**	**114,509.13**	**782,207.74**
5		***	**2,330,900.00**	**56,582.29**	**2,387,482.29**	**1,490,765.42**	**114,509.13**	**782,207.74**
A 7140.450-00-000	Community Service-Supplies		0.00	424.87	424.87	424.87	0.00	0.00
7140	**RECREATION**	*	**0.00**	**424.87**	**424.87**	**424.87**	**0.00**	**0.00**
71		**	**0.00**	**424.87**	**424.87**	**424.87**	**0.00**	**0.00**

JORDAN - ELBRIDGE CSD

Appropriation Status Detail Report By Function From 7/1/2020 To 2/28/2021

Account	Description		Budget	Adjustments	Adj. Budget	Expensed	Encumbered	Available
7		***	**0.00**	**424.87**	**424.87**	**424.87**	**0.00**	**0.00**
A 9010.800-00-000	Employee Retirement System		425,645.00	0.00	425,645.00	396,170.00	0.00	29,475.00
9010	**STATE RETIREMENT**	*	**425,645.00**	**0.00**	**425,645.00**	**396,170.00**	**0.00**	**29,475.00**
A 9020.800-00-000	Teacher Retirement System		1,066,194.00	0.00	1,066,194.00	972,205.81	0.00	93,988.19
9020	**TEACHERS' RETIREMENT**	*	**1,066,194.00**	**0.00**	**1,066,194.00**	**972,205.81**	**0.00**	**93,988.19**
A 9030.800-00-000	FICA Social Security Medicare		1,017,788.00	0.00	1,017,788.00	562,923.97	430,877.03	23,987.00
9030	**SOCIAL SECURITY**	*	**1,017,788.00**	**0.00**	**1,017,788.00**	**562,923.97**	**430,877.03**	**23,987.00**
A 9040.800-00-000	Workers Compensation		225,000.00	0.00	225,000.00	214,480.44	5,889.56	4,630.00
9040	**WORKERS COMP**	*	**225,000.00**	**0.00**	**225,000.00**	**214,480.44**	**5,889.56**	**4,630.00**
A 9050.800-00-000	Unemployment Insurance		50,000.00	30,125.42	80,125.42	30,125.42	0.00	50,000.00
9050	**UNEMPLOYMENT INSURANCE**	*	**50,000.00**	**30,125.42**	**80,125.42**	**30,125.42**	**0.00**	**50,000.00**
A 9060.800-00-000	Health Insurance		3,672,715.00	0.00	3,672,715.00	2,411,245.62	1,254,252.82	7,216.56
A 9060.801-00-000	Dental Insurance		98,000.00	0.00	98,000.00	50,817.95	47,102.05	80.00
A 9060.802-00-000	Vision Insurance		47,000.00	0.00	47,000.00	23,996.93	22,995.07	8.00
A 9060.803-00-000	Medicare Part B Payment to GF Retirees		1,160.00	0.00	1,160.00	0.00	0.00	1,160.00
A 9060.804-00-000	403B Administration		2,000.00	0.00	2,000.00	1,716.00	0.00	284.00
A 9060.805-00-000	Flex Spending Plan		4,000.00	0.00	4,000.00	1,859.55	1,428.25	712.20
9060	**HOSPITAL, MEDICAL & DENTAL INS**	*	**3,824,875.00**	**0.00**	**3,824,875.00**	**2,489,636.05**	**1,325,778.19**	**9,460.76**
A 9080.800-00-000	Employee Tuition		7,500.00	7,499.99	14,999.99	6,142.77	1,357.22	7,500.00
9080		*	**7,500.00**	**7,499.99**	**14,999.99**	**6,142.77**	**1,357.22**	**7,500.00**
90		**	**6,617,002.00**	**37,625.41**	**6,654,627.41**	**4,671,684.46**	**1,763,902.00**	**219,040.95**
A 9711.600-00-000	Serial Bonds - Principal - School		1,995,000.00	227.00	1,995,227.00	1,756,564.45	400,000.00	-161,337.45
A 9711.700-00-000	Serial Bonds - Interest - School		567,603.00	-227.00	567,376.00	236,887.22	330,487.50	1.28
9711		*	**2,562,603.00**	**0.00**	**2,562,603.00**	**1,993,451.67**	**730,487.50**	**-161,336.17**
A 9713.600-00-000	Serial Bonds - Principal - BOCES		210,000.00	0.00	210,000.00	0.00	210,000.00	0.00
A 9713.700-00-000	Serial Bonds - Interest - BOCES		89,150.00	0.00	89,150.00	44,575.00	44,575.00	0.00
9713		*	**299,150.00**	**0.00**	**299,150.00**	**44,575.00**	**254,575.00**	**0.00**
A 9731.700-00-000	Bond Anticipation Note-School-Interest		91,000.00	0.00	91,000.00	0.00	0.00	91,000.00
9731		*	**91,000.00**	**0.00**	**91,000.00**	**0.00**	**0.00**	**91,000.00**
A 9789.600-00-000	Energy Perf. Contract-Principal		201,504.00	0.00	201,504.00	201,503.69	0.00	0.31
A 9789.700-00-000	Energy Perf. Contract-Interest		13,478.00	0.00	13,478.00	13,477.05	0.00	0.95
9789		*	**214,982.00**	**0.00**	**214,982.00**	**214,980.74**	**0.00**	**1.26**
97		**	**3,167,735.00**	**0.00**	**3,167,735.00**	**2,253,007.41**	**985,062.50**	**-70,334.91**

JORDAN - ELBRIDGE CSD

Appropriation Status Detail Report By Function From 7/1/2020 To 2/28/2021

Account	Description		Budget	Adjustments	Adj. Budget	Expensed	Encumbered	Available
A 9901.930-00-000	Transfer to School Food Service Fund		15,000.00	0.00	15,000.00	0.00	0.00	15,000.00
A 9901.950-00-000	Transfer to Special Aid Fund		60,000.00	0.00	60,000.00	0.00	0.00	60,000.00
A 9901.950-3Y-000	Transfer to Special Aid Fund - 3 Yr Old Pre-K		168,200.00	0.00	168,200.00	0.00	0.00	168,200.00
A 9901.950-4Y-000	Transfer to Special Aid Fund-4 Yr Old Pre-K		143,000.00	0.00	143,000.00	0.00	0.00	143,000.00
9901	**TRANSFER TO SPECIAL AID**	*	**386,200.00**	**0.00**	**386,200.00**	**0.00**	**0.00**	**386,200.00**
A 9950.900-00-000	Transfer to Capital-Capital Outlay		100,000.00	0.00	100,000.00	0.00	0.00	100,000.00
9950	**TRANSFER TO CAPITAL**	*	**100,000.00**	**0.00**	**100,000.00**	**0.00**	**0.00**	**100,000.00**
99		**	**486,200.00**	**0.00**	**486,200.00**	**0.00**	**0.00**	**486,200.00**
9		***	**10,270,937.00**	**37,625.41**	**10,308,562.41**	**6,924,691.87**	**2,748,964.50**	**634,906.04**
	Fund ATotals:		**31,390,000.00**	**541,872.72**	**31,931,872.72**	**18,333,242.33**	**9,035,399.03**	**4,563,231.36**
	Grand Totals:		**31,390,000.00**	**541,872.72**	**31,931,872.72**	**18,333,242.33**	**9,035,399.03**	**4,563,231.36**

JORDAN - ELBRIDGE CSD

Revenue Status Report From 7/1/2020 To 2/28/2021

Account	Description	Budget	Adjustments	Revised Budget	Revenue Earned	Unearned Revenue
A 1001	Real Property Taxes School	12,497,287.00	0.00	12,497,287.00	10,680,735.49	1,816,551.51
A 1081	Other Payments in Lieu of Taxes	471,414.00	0.00	471,414.00	444,141.00	27,273.00
A 1085	School Tax Relief (STAR)	0.00	0.00	0.00	1,818,039.36	-1,818,039.36
A 1090	Interest & Penalties School Taxes	15,000.00	0.00	15,000.00	6,802.83	8,197.17
A 1120	Non Property Tax Distribution Counties	19,100.00	0.00	19,100.00	17,585.91	1,514.09
A 1335	Other Student Fees/Charges from Indiv	10,000.00	0.00	10,000.00	1,686.00	8,314.00
A 1410	Admissions from Individuals	1,500.00	0.00	1,500.00	0.00	1,500.00
A 1489	Other Charges for Services	0.00	0.00	0.00	3,000.31	-3,000.31
A 2230	Day School Tuition Other Districts	15,000.00	0.00	15,000.00	38,760.00	-23,760.00
A 2291	Narcotic Control Services for BOCES	20,000.00	0.00	20,000.00	25,000.00	-5,000.00
A 2401	Interest & Earnings	13,000.00	0.00	13,000.00	11,351.69	1,648.31
A 2413	Rental of Real Property BOCES	41,500.00	0.00	41,500.00	41,500.00	0.00
A 2450	Commissions	0.00	0.00	0.00	192.02	-192.02
A 2650	Sale of Scrap and Excess Materials	0.00	0.00	0.00	843.75	-843.75
A 2680	Insurance Recoveries	0.00	0.00	0.00	6,896.55	-6,896.55
A 2701	Refund Prior Year BOCES Expenditures	150,000.00	0.00	150,000.00	477,918.25	-327,918.25
A 2703	Refund Prior Year Other Expenditures	20,000.00	0.00	20,000.00	44,953.00	-24,953.00
A 2705	Gifts & Donations	0.00	0.00	0.00	1,000.00	-1,000.00
A 2770	Misc Revenue from Local Sources	394,000.00	0.00	394,000.00	414,366.46	-20,366.46
A 2773	Misc Revenue Transportation	3,500.00	0.00	3,500.00	0.00	3,500.00
A 3101.0	State Aid Basic Formula Aid	10,776,251.00	0.00	10,776,251.00	2,192,348.47	8,583,902.53
A 3101.1	State Aid Excess Cost Aid	261,695.00	0.00	261,695.00	497,298.41	-235,603.41
A 3102	State Aid Lottery	1,500,000.00	0.00	1,500,000.00	1,484,619.91	15,380.09
A 3102.1	State Aid VLT Lottery	500,000.00	0.00	500,000.00	554,309.19	-54,309.19
A 3103	State Aid BOCES	1,578,000.00	0.00	1,578,000.00	769,412.70	808,587.30
A 3260	State Aid Textbook Aid (Inc Lottery Ai	67,500.00	0.00	67,500.00	0.00	67,500.00
A 3262	State Aid Computer Software/Hardware	38,450.00	0.00	38,450.00	190,200.46	-151,750.46
A 3263	State Aid Library	7,200.00	0.00	7,200.00	0.00	7,200.00
A 3289	State Aid Other	10,000.00	0.00	10,000.00	0.00	10,000.00
A 4286	CARES Act-Federal Educ Stabilization	310,603.00	0.00	310,603.00	0.00	310,603.00
A 4601	Federal Aid Medicaid	25,000.00	0.00	25,000.00	63,421.11	-38,421.11
A 5031	Interfund Transfers	91,000.00	0.00	91,000.00	0.00	91,000.00
A 5050	Interfund Transfers from Debt Service Fund	165,000.00	0.00	165,000.00	0.00	165,000.00

JORDAN - ELBRIDGE CSD

Revenue Status Report From 7/1/2020 To 2/28/2021

Account	Description		Budget	Adjustments	Revised Budget	Revenue Earned	Unearned Revenue
		A Totals:	29,002,000.00	0.00	29,002,000.00	19,786,382.87	9,215,617.13
		Grand Totals:	29,002,000.00	0.00	29,002,000.00	19,786,382.87	9,215,617.13

JORDAN-ELBRIDGE CENTRAL SCHOOL DISTRICT
2021-2022

JULY

S	M	T	W	T	F	S
				1	2	3
4	5C	6	7	8	9	10
11	12	13	14	15P	16	17
18	19	20	21	22	23	24
25	26	27	28	29	30P	31

AUGUST

S	M	T	W	T	F	S
1	2	3	4	5	6	7
8	9	10	11	12	13P	14
15	16	17	18	19	20	21
22	23	24	25	26	27	28
29	30	31P				

SEPTEMBER

S	M	T	W	T	F	S
			1	2	3	4
5	6C	*7	8	9	10	11
12	13	14	15P	16	17	18
19	20	21	22	23	24	25
26	27	28	29	30P		

OCTOBER

S	M	T	W	T	F	S
					1	2
3	4	5	6	~~7~~	8	9
10	11C	12	13	14	15P	16
17	18	19	20	21	22	23
24	25	26	27	28	29P	30
31						

NOVEMBER

S	M	T	W	T	F	S
	1	2	3	4	5	6
7	8	9	10	11C	12	13
14	15P	16	17	18	19	20
21	22	23	24C	25C	26C	27
28	29	30P				

DECEMBER

S	M	T	W	T	F	S
			1	~~2~~	3	4
5	6	7	8	9	10	11
12	13	14	15P	16	17	18
19	20	21	22	23	24C	25
26	27C	28	29	30	31CP	

	=	School Not in Session
△	=	P/T - Parent/Teacher Conf.
P	=	Pay Period
JP	=	JETA Only Pay Period
R	=	Regents Exams

Holidays

September 1	-	Supt./ Staff Development Day
September 2	-	Supt./ Staff Development Day
September 6	-	Labor Day
September 7	-	First Day of School
October 7	-	I.B. Community Project Half Day for Grades 6 & 7
October 11	-	Columbus Day **NO SCHOOL**
November 11	-	Veterans Day **NO SCHOOL**
November 22		Supt./ Staff Development Day
November 22	-	Elementary & M.S. P/T Conferences **Grades 3YP-8-No School for Students**
November 22	-	High School-Supt./Staff Development Day **Grades 9-12- No School for Students**
November 22-26	-	Thanksgiving Recess **NO SCHOOL**
December 2	-	I.B. Community Project Half Day for Grades 6 & 7
December 24- December 31	-	Christmas/New Year's Recess **NO SCHOOL**
January 17	-	Martin Luther King Day **NO SCHOOL**
Jan. 25-28	-	Regents Exams (9-12)
February 10	-	I.B. Community Project Half Day for Grades 6 & 7
February 21-25	-	Mid-Winter Recess **NO SCHOOL**
March 18	-	Supt./ Staff Development Day
March 31	-	I.B. Community Project Half Day for Grades 6 & 7
April 11-15	-	Spring Recess **NO SCHOOL**
May 12	-	I.B. Community Project Half Day for Grades 6 & 7
May 30	-	Memorial Day **NO SCHOOL**
June 14	-	Last Day of Classes for at High School
June 15-17	-	Regents Exams (9-12)
June 20	-	Juneteenth Holiday
June 21-23	-	Regents Exams (9-12)
June 24	-	Last Day of Classes for 3 YP - 8
June 24	-	Rating Day/Last Reporting Day for JETA & 10 Month Local 200 Staff
June 24	-	Graduation Day

Instructional Days	
September	18
October	20
November	16
December	17
January	20
February	15
March	22
April	16
May	21
June	16
Student Days	181
Staff Dev./Rating	5
Total Teacher Days	186

JANUARY

S	M	T	W	T	F	S
						1
2	3	4	5	6	7	8
9	10	11	12	13	14P	15
16	17C	18	19	20	21	22
23	24	25R	26R	27R	28R	29
30	31P					

FEBRUARY

S	M	T	W	T	F	S
		1	2	3	4	5
6	7	8	9	~~10~~	11	12
13	14	15P	16	17	18	19
20	21C	22	23	24	25C	26
27	28P					

MARCH

S	M	T	W	T	F	S
		1	2	3	4	5
6	7	8	9	10	11	12
13	14	15P	16	17	18	19
20	21	22	23	24	25	26
27	28	29	30	~~31P~~		

APRIL

S	M	T	W	T	F	S
					1	2
3	4	5	6	7	8	9
10	11C	12	13	14	15CP	16
17	18	19	20	21	22	23
24	25	26	27	28	29P	30

MAY

S	M	T	W	T	F	S
1	2	3	4	5	6	7
8	9	10	11	~~12~~	13P	14
15	16	17	18	19	20	21
22	23	24	25	26	27	28
29	30C	31P				

JUNE

S	M	T	W	T	F	S
			1	2	3	4
5	6	7	8	9	10	11
12	13	14	15PR	16R	17R	18
19	20C	21R	22R	23JPR	24	25
26	27	28	29	30P		

C	=	All Offices Closed
▭	=	Rating Day
◯	=	Supt./Staff Dev. Day
/	=	Half Day for Grades 6 & 7 I.B. Community Project Release time is 12:25 PM

adopted 3/17/21

CONTRACT FOR HEALTH AND WELFARE SERVICES

THIS AGREEMENT made March 3, 2021, by and between the Board of Education of the **Jordan-Elbridge Central** School District, party of the first part, and the Board of Education of West Genesee Central School District, party of the second part.

WITNESSETH, That whereas party of the first part has been duly empowered by the provisions of Section 912 of the Education Law to enter into a contract for the purpose of providing health and welfare services for children residing in said school district and attending nonpublic schools in West Genesee Central School District, to begin on September 1, 2020, and to end June 30, 2021.

NOW, THEREFORE, the said party of the first part hereby agrees to pay the party of the second part the sum of **$3,758.09** for health and welfare services to be provided under Section 912 to **7** child/children residing in said **Jordan-Elbridge Central** School District and attending nonpublic schools in said West Genesee Central School District,

AND the party of the second part hereby agrees with the party of the first part that the health and welfare services provided shall consist of physician services, nurse services, and supplies and equipment for use by physician and/or school nurse. It is expressly agreed by and between the parties hereto that the services agreed to be supplied under this contract shall not include any teaching service.

It is mutually agreed by and between the parties hereto that the per pupil charge shall be computed on actual district cost divided by the October 1st total public and nonpublic enrollment.

It is mutually agreed that this contract shall not become valid and binding upon either party thereto until the same shall be approved by the **Jordan-Elbridge Central** School District superintendent of schools.

RESOLUTION OF THE BOARD OF EDUCATION
FOR
JORDAN ELBRIDGE CENTRAL SCHOOL DISTRICT

WHEREAS, the Board of Education of the Jordan Elbridge Central School District (hereinafter referred to as the "District") desires to enter into a thirty-six month service agreement with the Onondaga-Cortland-Madison Board of Cooperative Educational Services (hereinafter referred to as OCM BOCES) in order for the OCM BOCES to furnish certain services to the District pursuant to New York State Education Law §1950(4)(jj), those services being lit fiber for high speed communications services in Co-Ser 601.

NOW, THEREFORE, it is

RESOLVED, that the Board of Education of Jordan Elbridge Central School District agrees to enter into a contract with the OCM BOCES for the provision of said services to the District and not to exceed in total over the life of this agreement the annual amount of $52,138.00 and associated CNYRIC charges with such amount to include annual OCM BOCES support costs and applicable taxes and surcharges, and with such support costs and applicable taxes and surcharges included at the current rate and subject to change as established in the OCM BOCES budget or mandated by any federal, state or local authority.

This amount may be amended with the approval of both parties. The District will be liable to OCM BOCES for early cancellation or withdrawal from this agreement to the same extent that OCM BOCES is liable to any vendor(s) of these services, including liability for applicable penalties or liquidated damages, and the District also be liable for costs and expenses, including reasonable attorneys' fees and disbursements, incurred by OCM BOCES as consequence of any such early cancellation or withdrawal. Payment will be made as part of a regular annual OCM BOCES contract for services. Further, this agreement is subject to the approval of the Board of Education of OCM BOCES. This contract will be for a maximum period of thirty-six months commencing on or about July 1, 2021 and continue through June 30, 2024.

CERTIFICATION OF DISTRICT CLERK

I, _____, District Clerk of the Jordan Elbridge Central School District, hereby certify that the attached resolution was adopted by the required majority of the Board of Education at its meeting held on _____, 2021.

Date: _____ _____
District Clerk

Note: Please return this completed resolution by fax (315) 431-8444 to the attention of Phillip Grome, Assistant Superintendent for Administration, OCM BOCES or scan to pgrome@ocmboces.org.

601/602 services

Jordan-Elbridge Central School

Services	WIDE AREA NETWORK CoSer 601	Base Fee	WAN Network Fees/Taxes & Surcharges	Intra-District Fiber Connections	E-Rate Fees (Base & RWADA)	Annual WAN Subtotal	E-Rate Reimbursement	VOICE SERVICES CoSer 602	Base Fees (Voice Processing)	Local Dialing	Long Distance	Voice Service & Support	Ongoing Vendor Maintenance	RIC Hosted VoIP Servers	Annual Voice Subtotal
Current Fees (2021)		$ 10,900	$ 52,138	$ 37,733	$4,615	**$105,386**	**($29,195)**		$3,378	$24,000	$500	$9,500			**$37,378**

Current Services Totals		**WAN 601**	$105,386	**Voice 602**	$37,378
Estimated E-Rate Discounts			-29,195		
BOCES Aid	76.6		-58,362		-14,316
Net Cost to District			**$17,829**		**$23,062**

Proposed Renewal	$ 10,900	$ 52,138	$ 38,082	$4,597	**$105,717**	**($29,195)**	$3,478	$24,000	$500	$9,785	$0	$0	**$37,763**

Proposed Services Totals		**WAN 601**	$105,717	**Voice 602**	$37,763
Estimated E-Rate Discounts			-29,195		
BOCES Aid	76.6		-58,616		-14,463
Net Cost to District			**$17,906**		**$23,300**

Wide Area Network (WAN) Service Facts

DESIGN

All contracts will run through June 30, 2024. The contract will be co-terminus with CNYRIC districts, which will result in additional savings.

Economies of scale will play a role in any support, securing, purchasing.

The base fee includes one gigabyte of dedicated internet bandwidth (WAN link max).

The service features three diverse internet service providers, for a total of 40 gigabytes of dedicated internet capacity.

This new WAN design allows for redundancy and multiple traffic paths.

A sufficient number of public internet protocol (IP) addresses will be provided via the CNYRIC's class B internet address (the organization currently owns more than 65,000 IP addresses).

The core WAN configuration represents a state-of-the-art ACI core infrastructure, and is supported regionally by the CNYRIC.

The WAN service provides true 10G dedicated bandwidth for services (upload and download). There is NO "best effort" speed, as one might find with business-class services.

SECURITY

Security services provide a private network with a secure backbone between districts/BOCES to both the CNYRIC's data center and an offsite redundant data center.

Distributed Denial of Service (DDoS) Cloud Scrubbing: The CNYRIC's public IP addresses are paired with Siverline's cloud scrubbing services to provide a frontline defense against crippling DDoS attacks.

The Firepower service provides onsite protection with IPS/IDS, GeoBlocking, and optional Malware Threat Defense.

Districts will also have direct access to CNYRIC-hosted applications, which are prioritized on our regional wide area network and do not flow with typical internet traffic. This includes direct, secure access to financial information, student information, server hosting, internet as a service, backup, hosted voice, email archiving, and more.

MANAGEMENT

The CNYRIC will manage any edge equipment on the district's behalf. District-located WAN equipment (such as routers, switches, and Firepower) that connect directly to the CNYRIC are supported, including configuration, maintenance, upgrades, and replacement.

WAN Link Monitoring: Network links are "on the glass" at the CNYRIC's Network Operations Center, and WAN monitoring is also provided by all fiber network providers.

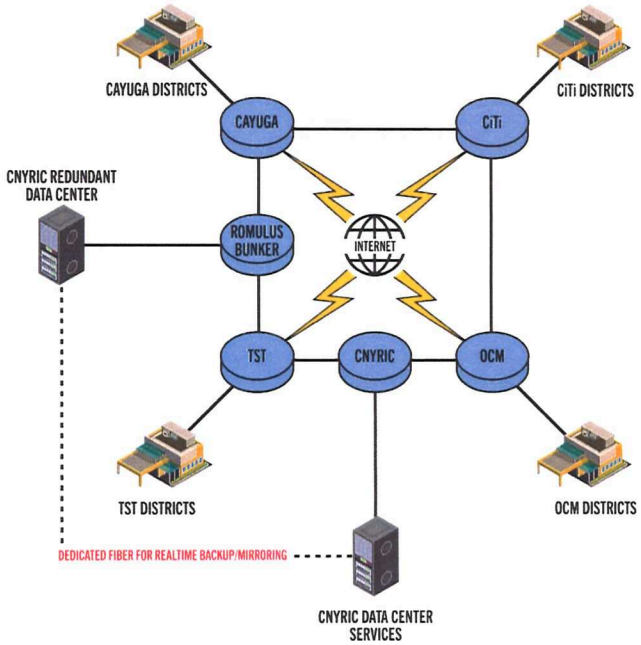

cnyric
Connecting Education

JAMES FROIO
JORDAN-ELBRIDGE CSD
PO BOX 902
JORDAN, NY 13080

==========

FINGERPRINT CLEARANCE

FOR EMPLOYMENT

==========

This is a notice that on 02/17/2021, **JUSTIN W BRANNOCK** filed his/her fingerprints with the New York State Education Department and has been cleared for employment in your school. Please note that this clearance is valid only for your school and may not be used for any other purpose, including but not limited to, employment at another school or institution. If your school no longer employs **JUSTIN W BRANNOCK**, you are required pursuant to Education Law and Regulations to notify OSPRA. Such notice should be made by submitting an online employment termination request or by filing a paper OSPRA 105 form, which is available on the OSPRA website.

DEBORAH A. MARRIOTT
OSPRA Fingerprinting Unit

Office of School Personnel Review and Accountability
NYS Education Department
89 Washington Avenue
Albany, NY 12234
(518)473-2998 -- Fax (518)473-8812
OSPRA@mail.nysed.gov
www.highered.nysed.gov/tcert/ospra/

Close Print

JAMES FROIO
JORDAN-ELBRIDGE CSD
PO BOX 902
JORDAN, NY 13080

==========

FINGERPRINT CLEARANCE

FOR EMPLOYMENT

==========

This is a notice that on 03/11/2021, **MARY K BARD** filed his/her fingerprints with the New York State Education Department and has been cleared for employment in your school. Please note that this clearance is valid only for your school and may not be used for any other purpose, including but not limited to, employment at another school or institution. If your school no longer employs **MARY K BARD**, you are required pursuant to Education Law and Regulations to notify OSPRA. Such notice should be made by submitting an online employment termination request or by filing a paper OSPRA 105 form, which is available on the OSPRA website.

DEBORAH A. MARRIOTT
OSPRA Fingerprinting Unit

Office of School Personnel Review and Accountability
NYS Education Department
89 Washington Avenue
Albany, NY 12234
(518)473-2998 -- Fax (518)473-8812
OSPRA@mail.nysed.gov
www.highered.nysed.gov/tcert/ospra/

Close Print

MEMORANDUM OF AGREEMENT

Between

The Jordan-Elbridge Central School District

And

The Jordan- Elbridge Administrative

Group Regarding

Membership

This Memorandum of Agreement is intended to clarify the rights of membership of administrators in the Jordan-Elbridge Central School District under Recognition, page 2 of the Collective Bargaining Agreement between the Superintendent of Schools for the Jordan-Elbridge Central School District and the Jordan-Elbridge Administrators Group for the period of July 1, 2021-June 30, 2022.

As per the collective bargaining agreement between the Board and the administrators group, membership in the administrative group shall be open to Principals, Assistant Principals, Associate Principals, Directors of Special Education, Special Education Chairpersons, Directors of Health, Physical Education and Athletics, Directors of Curriculum, Instruction, and Intermediate Education.

Jordan-Elbridge Central School District Jordan-Elbridge Administrative Group

Karen Guerrette, President _____ **Date:** _____

David Shafer, President _____ **Date:** _____

JAMES FROIO
JORDAN-ELBRIDGE CSD
PO BOX 902
JORDAN, NY 13080

==========

FINGERPRINT CLEARANCE

FOR EMPLOYMENT

==========

This is a notice that on 03/11/2021, **NINA L BAKER** filed his/her fingerprints with the New York State Education Department and has been cleared for employment in your school. Please note that this clearance is valid only for your school and may not be used for any other purpose, including but not limited to, employment at another school or institution. If your school no longer employs **NINA L BAKER**, you are required pursuant to Education Law and Regulations to notify OSPRA. Such notice should be made by submitting an online employment termination request or by filing a paper OSPRA 105 form, which is available on the OSPRA website.

DEBORAH A. MARRIOTT
OSPRA Fingerprinting Unit

Office of School Personnel Review and Accountability
NYS Education Department
89 Washington Avenue
Albany, NY 12234
(518)473-2998 -- Fax (518)473-8812
OSPRA@mail.nysed.gov
www.highered.nysed.gov/tcert/ospra/

Close Print